ST30

ST30 series is a revolutionary design that encompasses all of the advantages of 52 cm (20.5") SuperTruss in a 30.5 x 30.5 cm (12" x 12") format. The SuperTruss line provides a substantial increase in load bearing capacity compared to the GP 30.5 x 30.5 (12" x 12") series. Made from EN-AW 6082T6, it features 50 x 4 mm (2" x 5/32") main chords and 25.4 x 3.2 mm (1" x 1/8") diagonals.

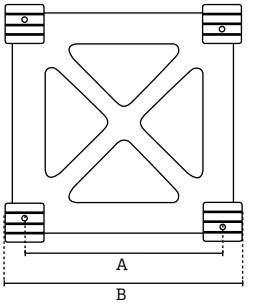

Code:		4ST30
Main Chords:	mm in	50x4 (2"x5/32")
Diagonals:	mm in	25.4x3.2 (1"x1/8")
Alloy:		EN-AW-6082 T6
A	mm in	254 (10")
B	mm in	305 (12")
Connection:		Fork/Pin

Standard lengths and weights

Code	4ST30-L500	4ST30-L1000	4ST30-L1500	4ST30-L2000	4ST30-L2500	4ST30-L3000	4ST30-L4000
Old code	JT B1205	JT B1210	JT B1215	JT B1220	JT B1225	JT B1230	JT B1240
m ft	**0.50** (1' 8")	**1.00** (3' 3")	**1.50** (4' 11")	**2.00** (6' 7")	**2.50** (8' 2")	**3.00** (9' 10")	**4.00** (13' 2")
kg lbs	**8.7** (19.18)	**12.9** (28.44)	**17.1** (37.71)	**21.3** (46.97)	**25.5** (56.23)	**29.7** (65.49)	**38.1** (84.01)

Loading chart

Span	Uniformly Distributed load		Centre Point load		Third Point load		Quarter Point load		5th Point load	
m	kg/m	mm	kg	mm	kg (2x)	mm	kg (3x)	mm	kg (4x)	mm
4	1173.6	14.5	2347.2	11.7	1760.4	14.9	1173.6	13.8	978	14.7
6	516	32.8	1548	26.3	1161	33.5	774	31.2	645	33
8	285.8	58.3	1143.3	47.1	857.5	59.6	571.7	55.5	476.4	58.8
10	179.3	91.3	896.5	74.2	672.4	93.3	448.3	87.1	373.5	92
12	121.4	131.9	728.6	107.7	546.4	134.6	364.3	125.8	303.6	132.9
14	86.5	180.1	605.8	148.2	454.3	183.6	302.9	172.1	252.4	181.3
16	63.9	236	511.1	195.8	383.3	240.5	255.6	226	213	237.6
18	48.4	299.9	435.3	251.2	326.5	305.3	217.6	287.7	181.4	301.8
19	42.4	334.8	402.5	281.9	301.9	340.7	201.3	321.6	167.7	337
20	37.3	371.9	372.6	314.7	279.4	378.2	186.3	357.6	155.2	374.1

Span	Uniformly Distributed load		Centre Point load		Third Point load		Quarter Point load		5th Point load	
ft	lbs/ft	in	lbs (2x)	in	lbs (3x)	in	lbs (3x)	in	lbs (4x)	in
13' 1"	788.62	9/16"	5175.58	29/64"	3881.68	37/64"	2587.79	17/32"	2156.49	37/64"
19' 8"	346.74	1 9/32"	3413.34	1 1/32"	2560.01	1 5/16"	1706.67	1 7/32"	1422.23	1 19/64"
26' 3"	192.05	2 9/32"	2520.98	1 27/32"	1890.79	2 11/32"	1260.60	2 11/64"	1050.46	2 5/16"
32' 10"	120.48	3 19/32"	1976.78	2 29/32"	1482.64	3 43/64"	988.50	3 27/64"	823.57	3 39/64"
39' 4"	81.58	5 3/16"	1606.56	4 15/64"	1204.81	5 19/64"	803.28	4 15/16"	669.44	5 7/32"
45' 11'	58.13	7 5/64"	1335.79	5 53/64"	1001.73	7 7/32"	667.89	6 49/64"	556.54	7 1/8"
52' 6"	42.94	9 9/32"	1126.98	7 45/64"	845.18	9 29/64"	563.60	8 57/64"	469.67	9 11/32"
59' 1"	32.52	11 51/64"	959.84	9 7/8"	719.93	12 1/64"	479.81	11 5/16"	399.99	11 7/8"
62' 4"	28.49	13 11/64"	887.51	11 3/32"	665.69	13 13/32"	443.87	12 21/32"	369.78	13 17/64"
65' 7"	25.06	14 41/64"	821.58	12 3/8"	616.08	14 7/8"	410.79	14 5/64"	342.22	14 23/32"

All truss loading calculations and TUV certifications are based on:
Truss supported or suspended at both ends • Static loadings only • Loads applies in the node points • Self-weight of the truss included • Spans made of different truss lengths • Interaction of bending moment and shear force at connector is considered • Structural calculations are based on EN 1991, EN 1993 and EN 1999 • All loading data should be multiplied by 0.85 to comply with BS 7905-2 / ANSI E1.2-2006 / CWA 15902-2 / prEN 17115 • For any other application, or in case of an assembled structure contact JTE or a structural engineer • Included safety factors: self-weight 1.35 / loading 1.50

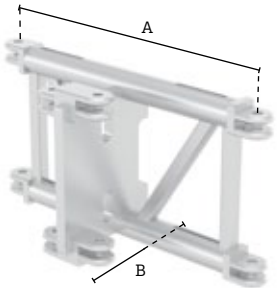

Corner gate 60°

Code	kg (lbs)	mm (in)
4ST30-G2-60°	**7.3** (16.10)	A **540** (21 1/4")
Old code		B **207** (8 9/64")
JT B1200A		

Corner gate 90°

Code	kg (lbs)	mm (in)
4ST30-G2-90°	**3.3** (7.28)	A **359** (14 1/8")
Old code		
JT B1201		

Corner gate 90°

Code	kg (lbs)	mm (in)
4ST30-G2-90°MK2	**5.6** (12.35)	A **359** (14 1/8")
Old code		
JT B1201		

Corner gate 120°

Code	kg (lbs)	mm (in)
4ST30-G2-120°	**2.6** (5.73)	A **254** (10")
Old code		
JT B1204A		

Corner gate 120°

Code	kg (lbs)	mm (in)
4ST30-G2-120°MK2	**4** (8.8)	A **254** (10")
Old code		
JT B1204A		

Corner gate 135°

Code	kg (lbs)	mm (in)
4ST30-G2-135°	**2.1** (4.63)	A **194** (7 5/8")
Old code		
JT B1203		

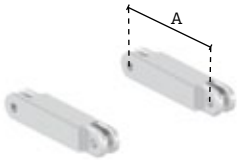

Corner gate 135°

Code	kg (lbs)	mm (in)
4ST30-G2-135°MK2	**2.4** (5.3)	A **194** (7 5/8")
Old code		
JT B1203		

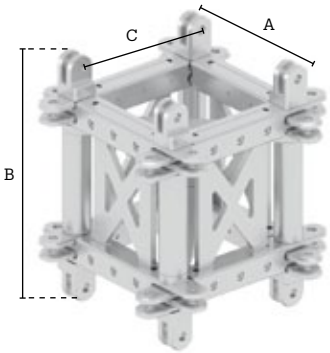

6 way corner

Code	kg (lbs)	mm (in)
4ST30-C6	**30.7** (67.70)	A **406.2** (15 63/64")
Old code		B **454.5** (17 57/64")
JT B1206W		C **254** (10")

Corner gate 120° with lifting point

Code	kg (lbs)	mm (in)
4ST30-G2-120°LP	**3.9** (8.60)	A **254** (10")
Old code		B **150** (5 57/64")
JT B1204B		

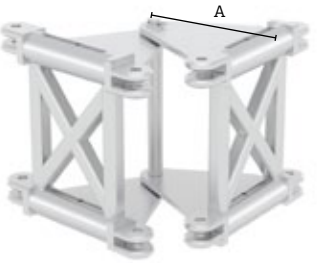

Gate support plate

Code	kg lbs	mm in
4ST30-GSP	**1.6** (3.53)	A **304** (11 61/64")
Old code		
JT B1208		

Pivot section 180°

Code	kg lbs	mm in
4ST30-PS-180°	**8.1** (17.86)	A **229** (9 1/64")
Old code		
JT B1206		

Adapter ST30 - GP30

Code	kg lbs	mm in
AD-4ST30-4GP30	**4.4** (9.70)	A **304** (11 61/64")
Old code		
JT B1211		

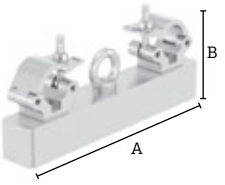

Ceiling support

Code	kg lbs	mm in
4ST30-CS	**2.4** (5.25)	A **366** (14 13/32")
Old code		B **139** (5 15/32")
JT B4712		

Corner solutions

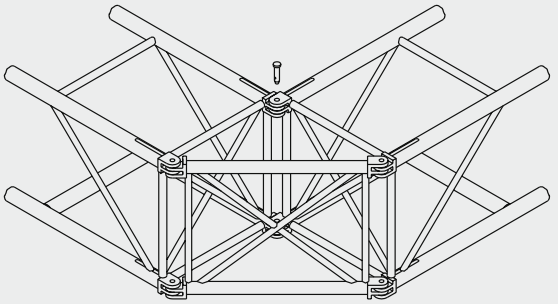

2 Way Connection
The 2 way joint is simply made by connecting the inside truss spigots and inserting a 2 way gate to join the outer truss tubes together. All joints are pinned using 12mm Pins and „R" clips.

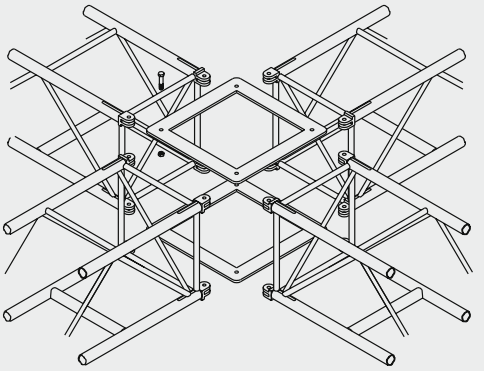

4 Way Connection
The 4 way joint is made by joining the 4 trusses together fitting a square support plate above and below the tubes of the truss locating through the spigot holes and joining together with M12 bolt sets.